# Shoshana Sylvester



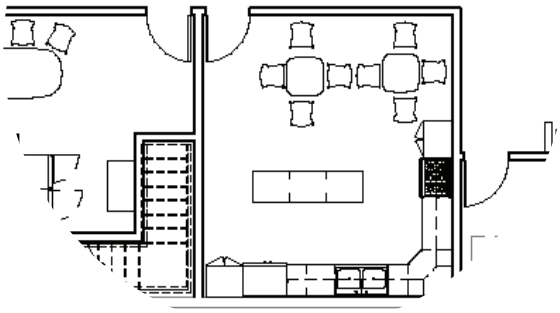

## Interior Architecture & Design Portfolio

# Table of Contents


| | |
|---|---|
| 1. San Diego County Administration Building | 4 |
| 2. Fallview Peak at Upper Yosemite Falls | 10 |
| 3. Victorian House Renovation | 14 |
| 4. Wetlands Education & Research Center | 20 |
| 5. American Factory Redesign | 26 |





# 01.

# San Diego County Administration Building Remodel

The San Diego County Administration Building is a historic Beaux-Arts and Spanish-Revival style building completed in 1938. This remodel is of the cafeteria space now to include a coffee bar with tables and lounge seating for workers and the public. A primary inspiration for the interior remodel is the Spanish-Revival style with archways and use of natural wood texture throughout the space.



Terracotta tile in the main walkway leads to the outdoor terrace with views of the San Diego bay.. Archways c
coffee bar and cafeteria lounge. A glass partition allows for passerbys to easily view the history center from th





pen up to the
e walkway.

# Cafeteria and History Center

The space is transformed into two spaces including a history center and a cafeteria. The cafeteria has a coffee bar with tables for seating. There are comfortable lounge chairs and sofas to accomodate visitors. The history center has display items, bookshelves and a conference room. There are also vending machines and a kitchen area for employees of San Diego County to utilize.

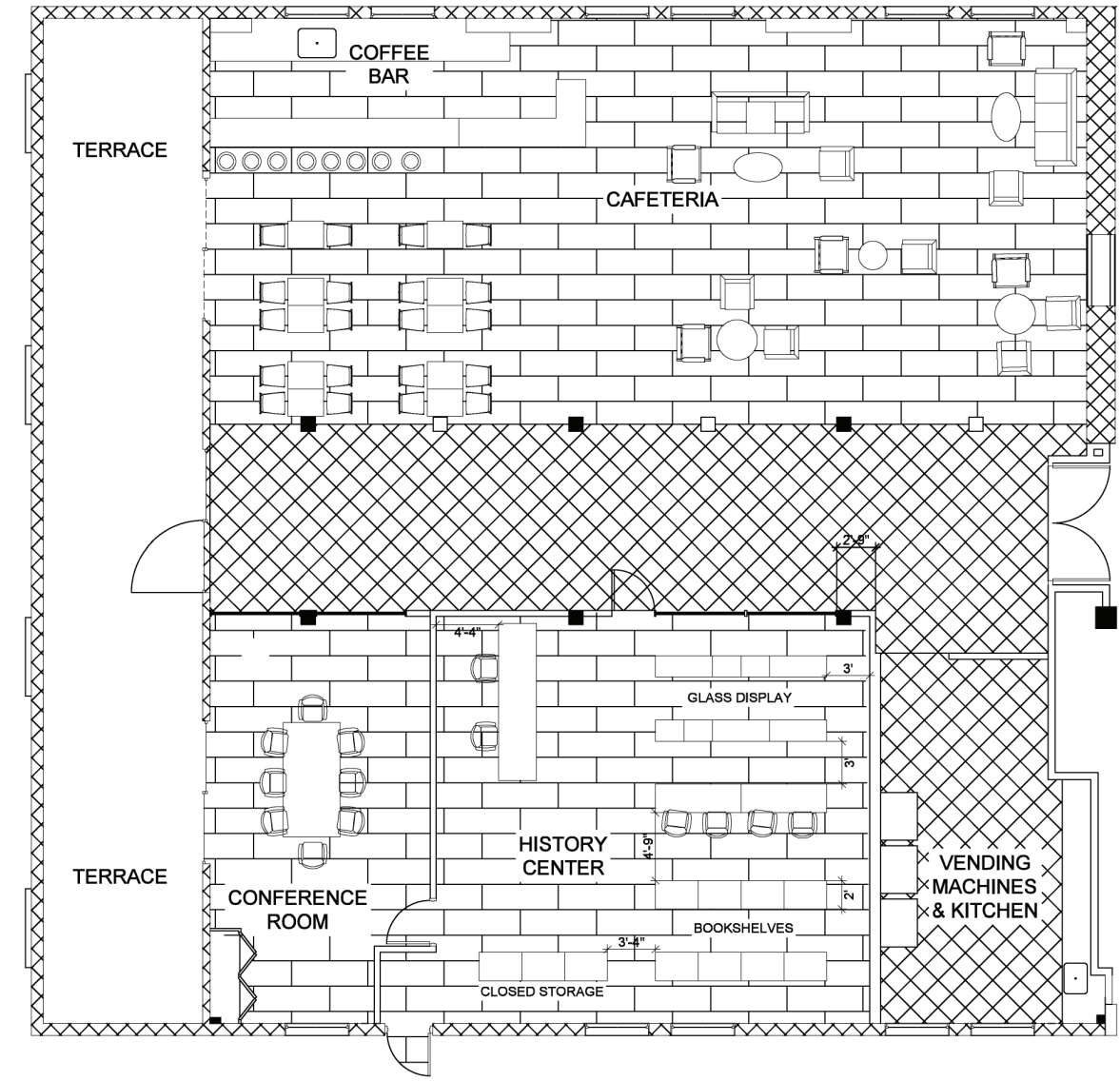


LEVEL 4 - FURNITURE PLAN
SCALE: 1/4" = 1'

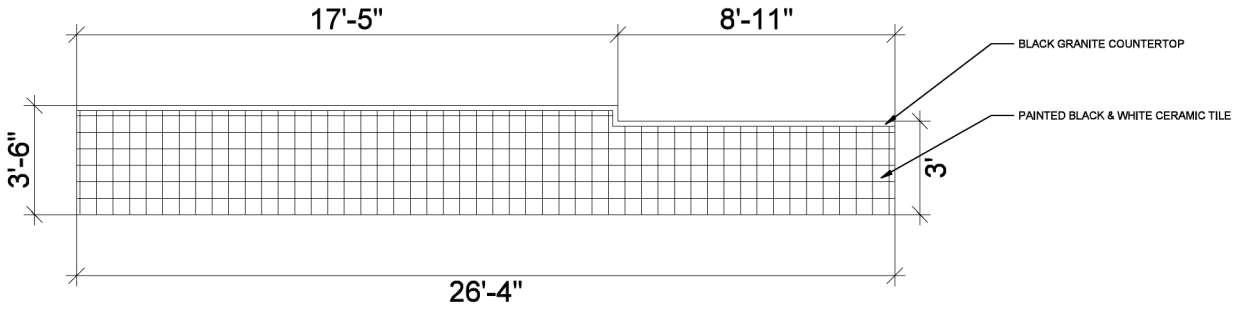


COFFEE BAR DETAIL
SCALE: 1/2" = 1'

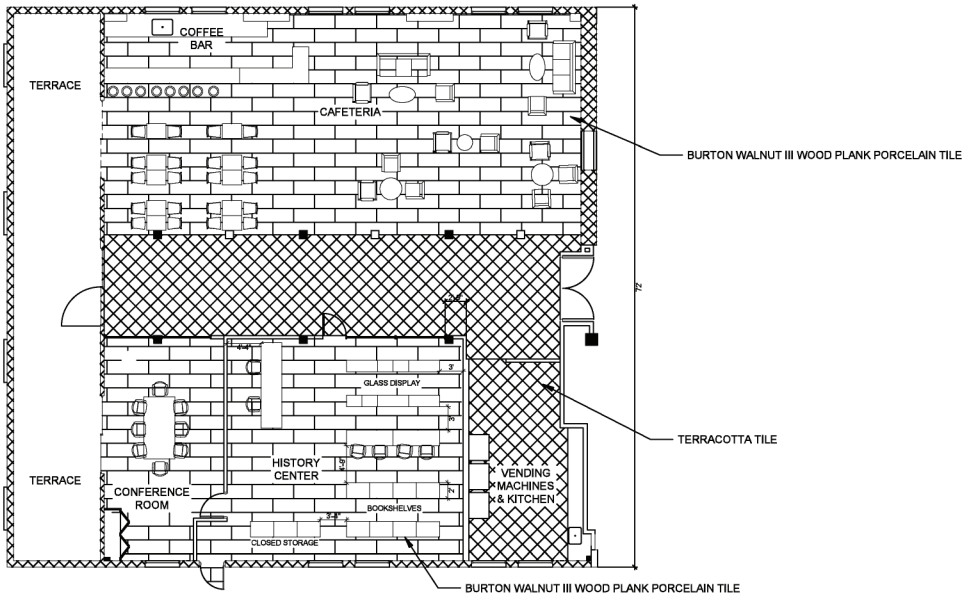


INTERIOR FINISH PLAN
SCALE: 1/4"=1'



## Materials

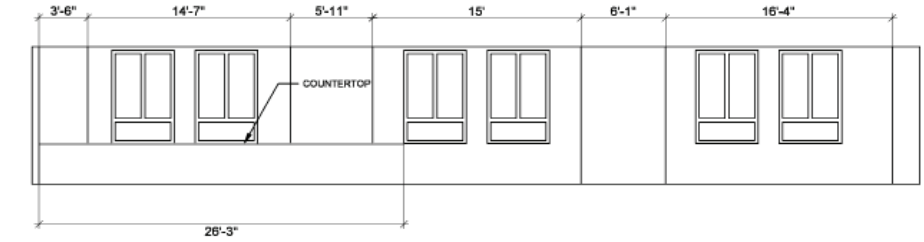


WEST ELEVATION
SCALE: 1/8" = 1'

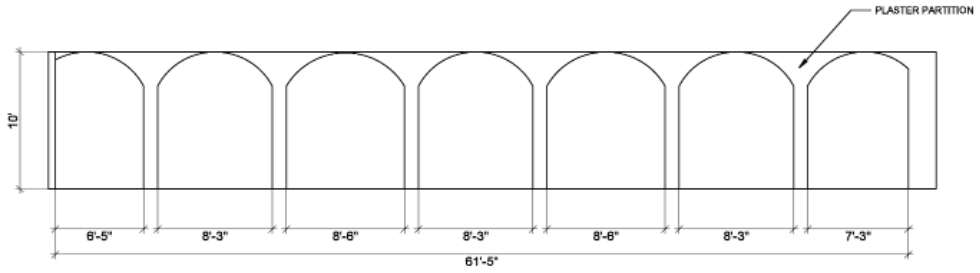


WEST INTERIOR PARTITION
SCALE: 1/8" = 1'

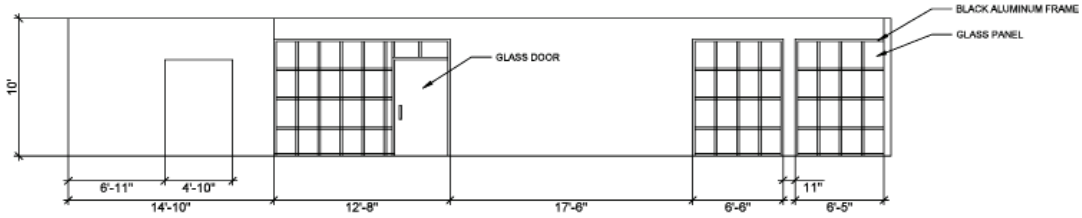


EAST INTERIOR PARTITION
SCALE: 1/8" = 1'

## Furniture













# 02. Fallview Peak at Upper Yosemite Falls





Upper Yosemite Falls is a popular day hike at Yosemite National Park at 7 miles round trip. The Koda prefab modular units are airlifted to the top of the falls to make this amazing view more accessible for users to spend time reflecting in nature. The units offer gift shops, restrooms, food and beverages, and meditation space. There is outdoor seating with a glass-bottom observation deck for thrill seekers.





FALLVIEW PEAK

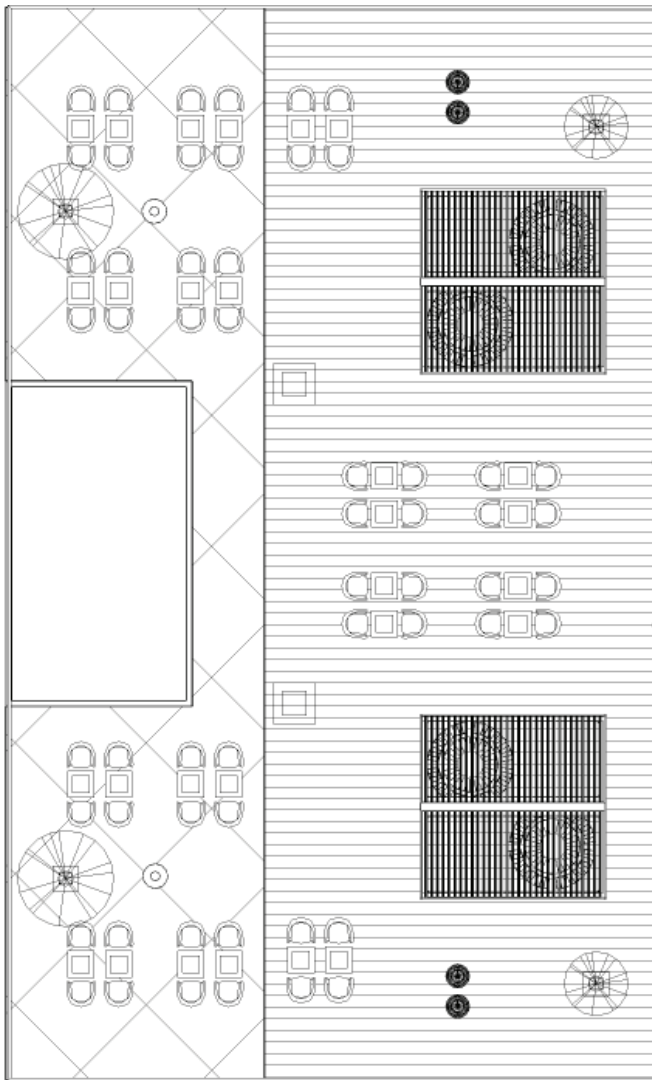

Floor Plan




MEDITATION LOUNGE
FOOD
MENS RESTROOM
GIFT SHOP
MEDITATION LOUNGE
BEVERAGES
WOMENS RESTROOM
GIFT SHOP



## Section





The historical Hayward-Patterson House on 22nd St. and Broadway in San diego was built in 1887 by Albert M. Hayward. This project is to be incorporated into a larger master plan of historic houses that will be utilized to revitalize the Sherman Heights neighborhood outside of downtown.

The house has been renovated to be a civic youth center for the community where school-aged children can socialize in the multipurpose room, take a variety of classes inclding technology, art, dance, cooking and learn about nature in the backyard greenhouse.

# 03. Victorian House Renovation



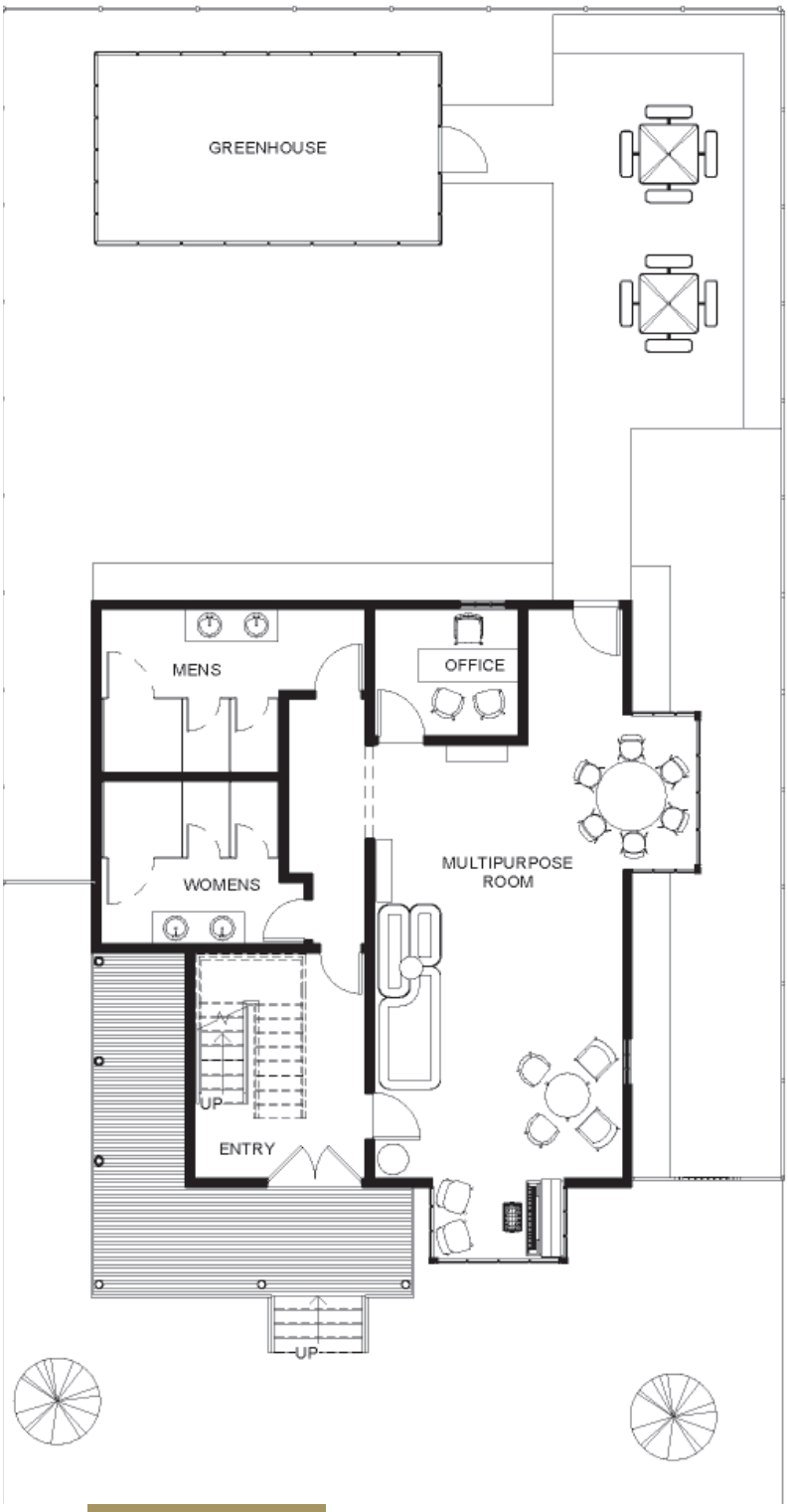


Level 1

The entryway on the first floor leads to the multipurpose room where there is lounge seating, tables, games, books, TV and an upright piano. The fenced in backyard has a greenhouse and an open lawn as well as outdoor tables and seating.

The stairway on the second floor opens up to a lounge space, technology center, large classroom, staff lounge and an instructional kitchen and dining space.

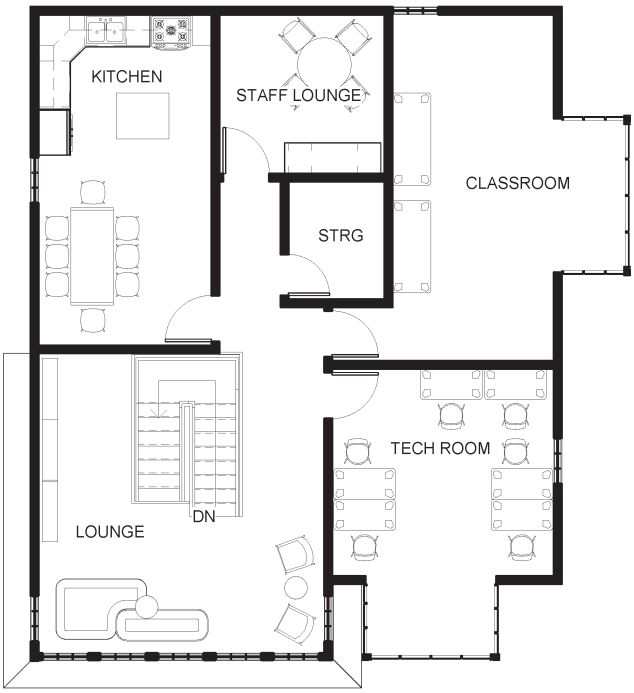


Level 2





Multipurpose Room







# Backyard Greenhouse

A new addition to this Victorian home is the backyard greenhouse. When visiting the youth center, users can feel more connected with nature and learn more about plants and growing food. The kitchen is well equipped for lessons in cooking utilizing fresh ingredients from the greenhouse.



# 04. Wetlands Education and Research Center



The Wetlands Education and Research Center is a collaboration between Architectural and Interior Design students at NewSchool of Architecture and Design as well as UC San Diego's natural reserve system to explore approaches to developing northeast Mission Bay. This project aims to serve as an education facility of K-12 students of science and promote research to better understand conservation efforts while addressing sustainability, sea level rise and provides a landmark destination.

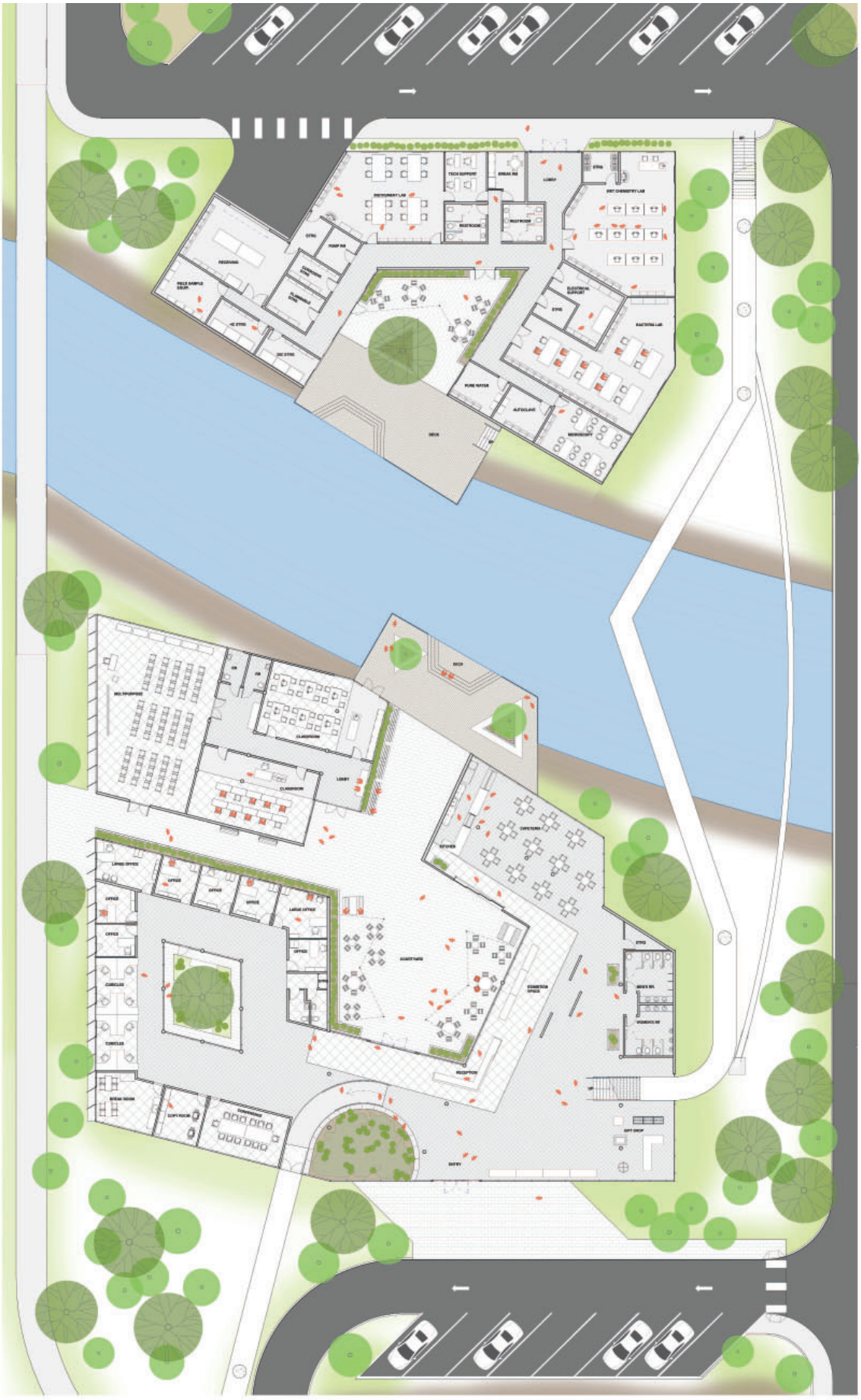

*GROUND FLOOR PLAN*
1/8" = 1' - 0"

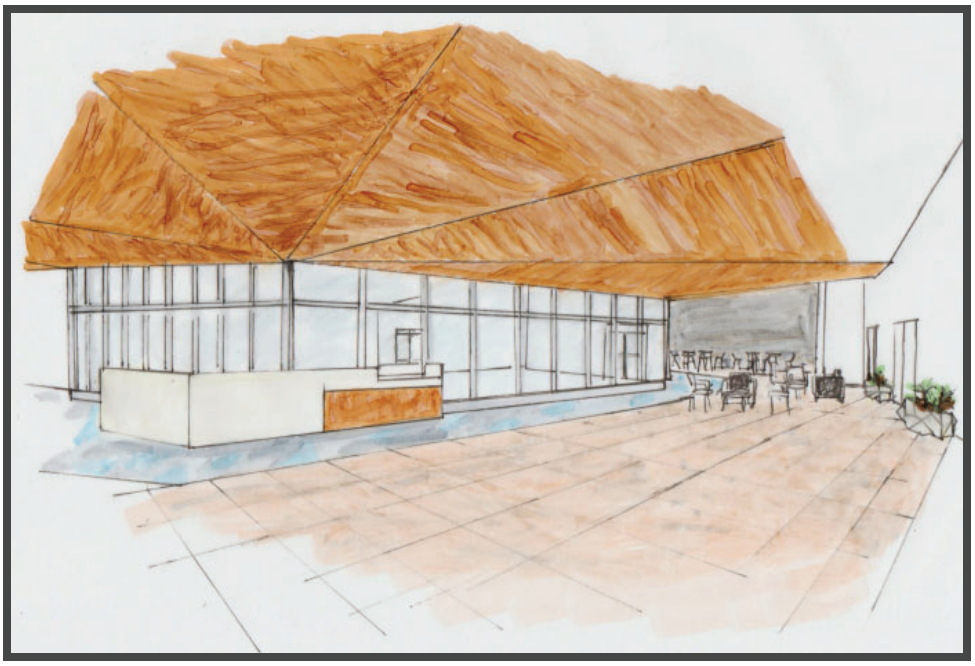

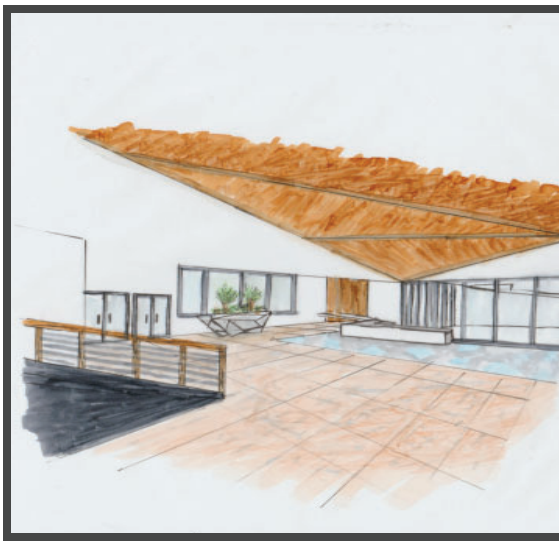

## Preliminary Sktches

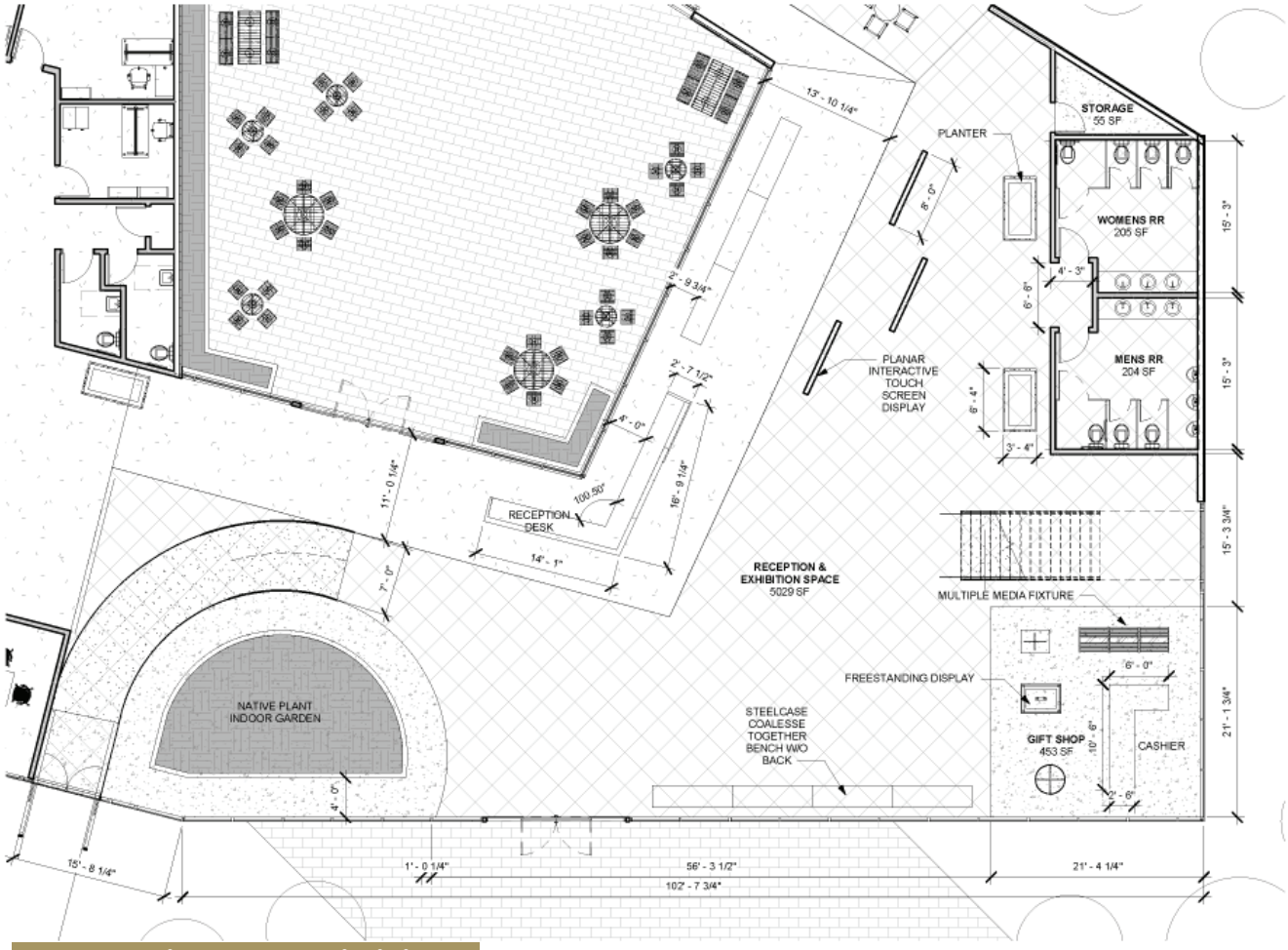


## Reception & Exhibition Space









## Cafeteria





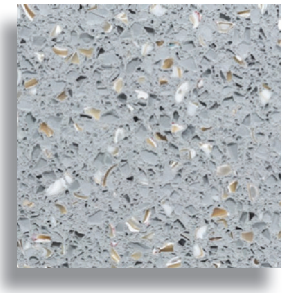

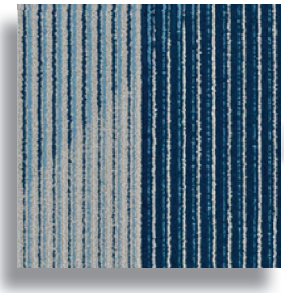









## Wet Chemistry Lab



# 05. American Factory Redesign



The location is a newly constructed 36,000 SF building in Austin, Texas. This size is more approachable and comfortable for start-ups and smaller scale product companies.



As the capital of Texas, Austin is a unique destination for innovation and technology. The region supports manufacturers through a geo-central location, low tax burden, no state income tax and living costs are below the national average.







Due to increased globalization and automation, manufacturing has been steadily declining in the United States. Now, there are many incentives to redevelop and reinvent the American factory. This design aims to promote wellbeing through ergonomics, aesthetics, natural elements and efficient lighting as well as provide a greater sense of community in the workplace.




## Ground Floor




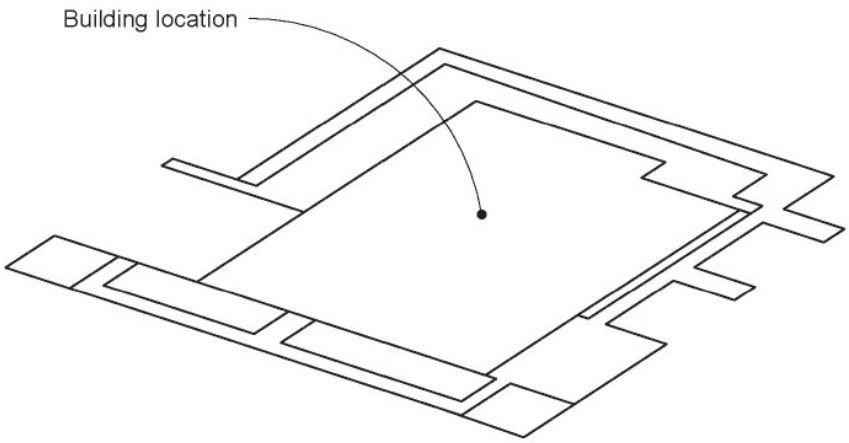


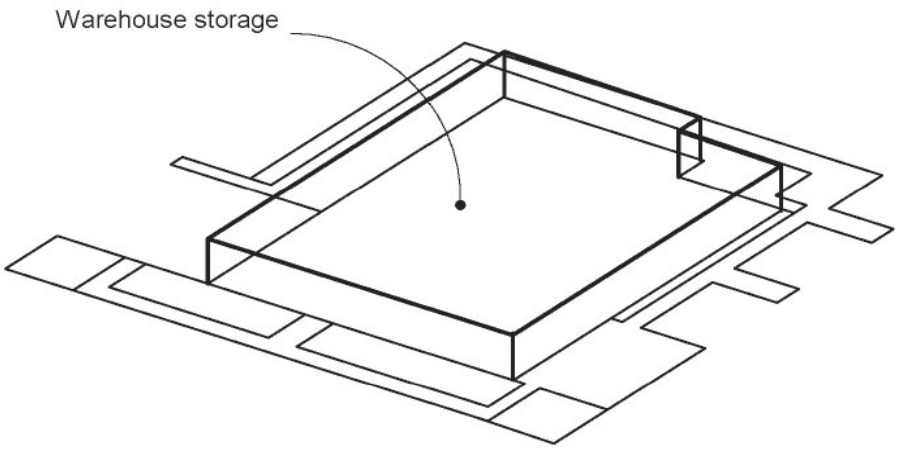


While manufacturing is often associated with bad working conditions, this is manufacturing revamped and reimagined through human centered design. The first level incorporates a welcoming lobby leading to the elevators, warehouse storage facilities, and the employee locker rooom. Lush grass surrounds the building with scattered trees.

# Level 2

The second level is designed entirely for one business. This layout is for a clothing company. The north region is devoted to the design and e-commerce executive offices while the south side is for manufacturing and a retail space showcasing the finished product in action.

The collaborative cube is primarily made of glass walls with a glass skylight that spands its expanse to allow for natural light throughout the workspaces. This is a beautiful courtyard area with trees for all employees of the building to enjoy and engage with one another. Private meetings can be held in the acoustic booths. Meal breaks are ideal at the long kitchen island, as well as the bistro tables and chairs. A special feature is the two story rock climbing wall which provides a fun activity in order to support an active lifestyle.

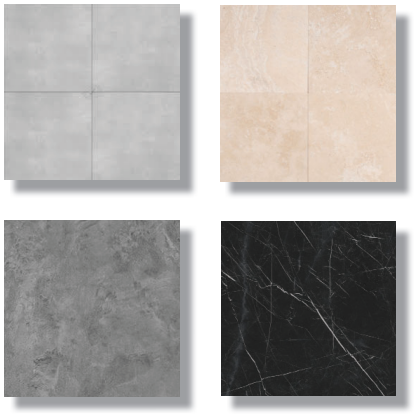

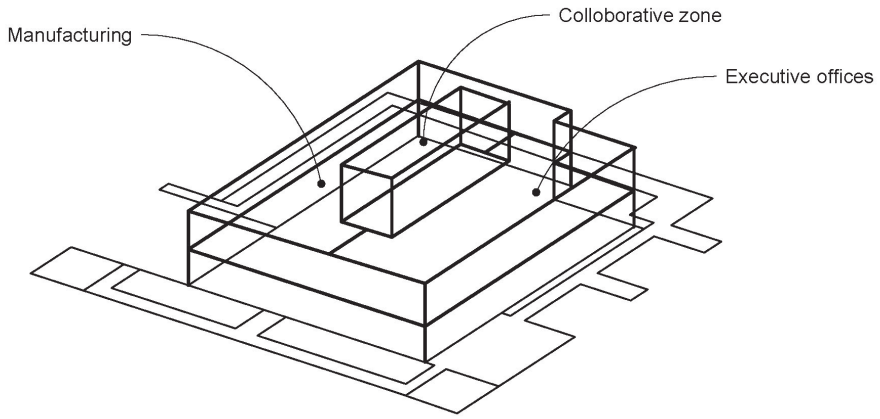




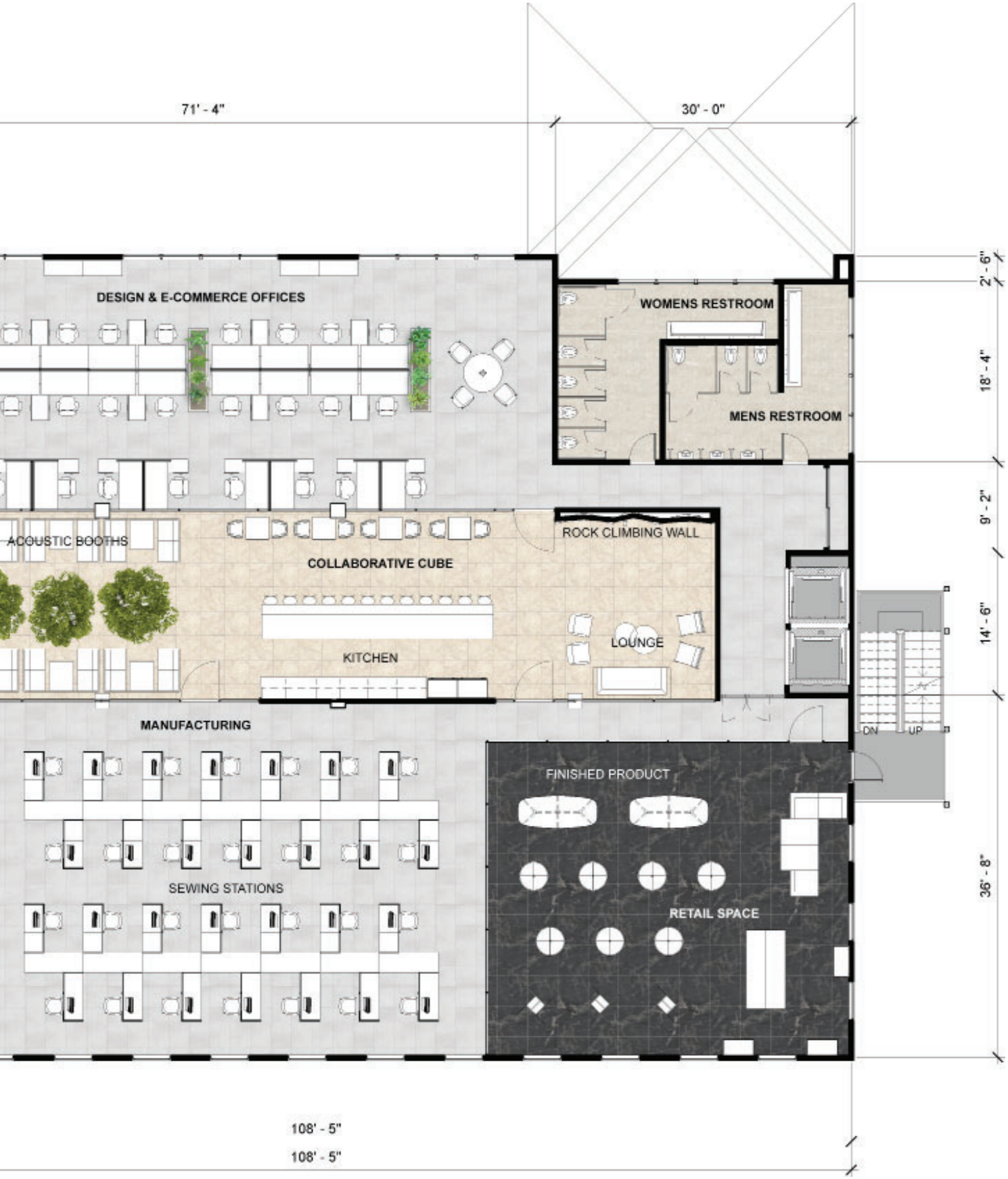
71' - 4"
30' - 0"
DESIGN & E-COMMERCE OFFICES
WOMENS RESTROOM
MENS RESTROOM
ACOUSTIC BOOTHS
COLLABORATIVE CUBE
ROCK CLIMBING WALL
KITCHEN
LOUNGE
MANUFACTURING
DN
UP
FINISHED PRODUCT
SEWING STATIONS
RETAIL SPACE
2' - 6"
18' - 4"
9' - 2"
14' - 6"
36' - 8"
108' - 5"
108' - 5"


7' - 1"
71' - 4"
25' - 8"
4' - 4"
15' - 0"
4' - 8"
5' - 2"
26' - 3"
DESIGN & E-COMMERCE OFFICES
OPEN TO
BELOW
78' - 9"
DN
DN
MANUFACTURING
CAD
STATION
MATERIALS
STORAGE
3D PRINTERS
108' - 5"

# Level 3

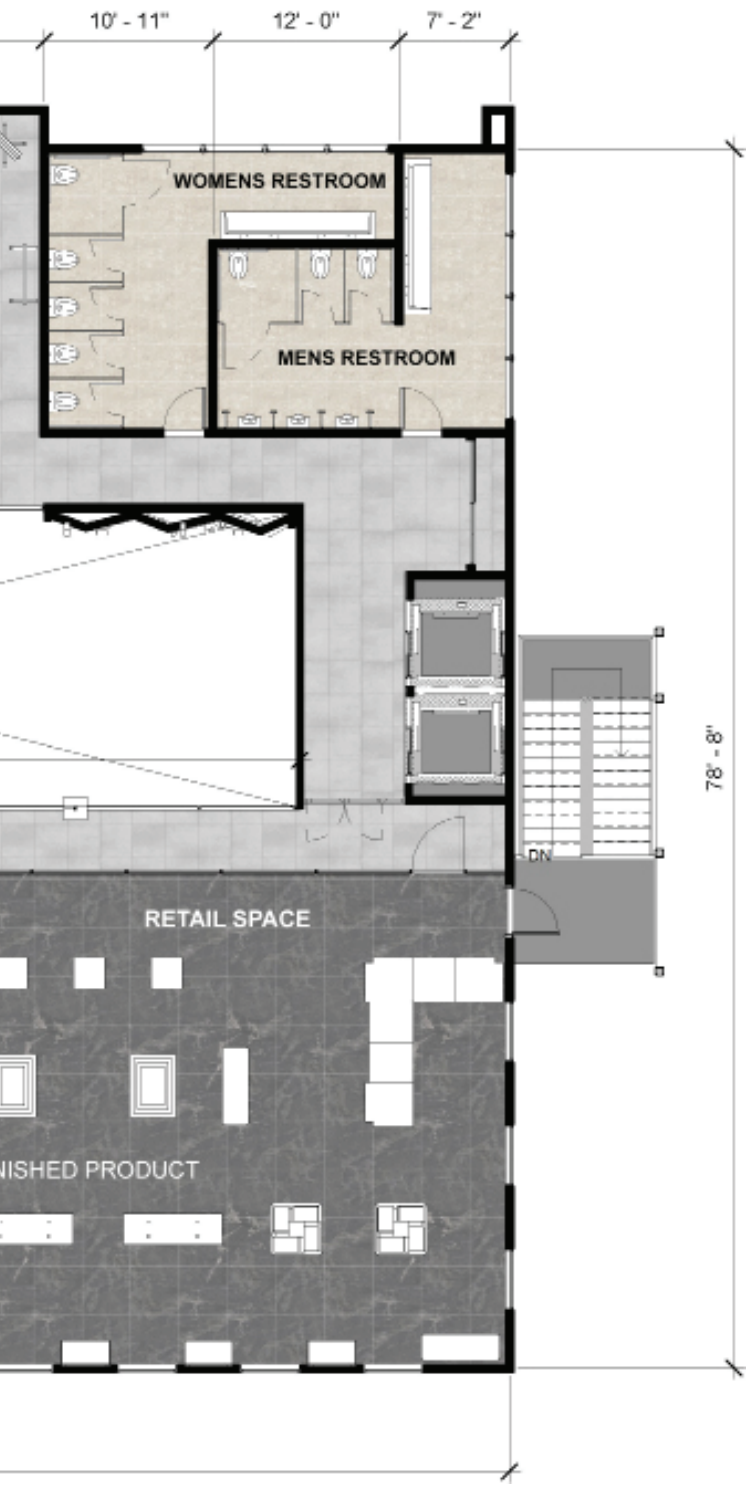


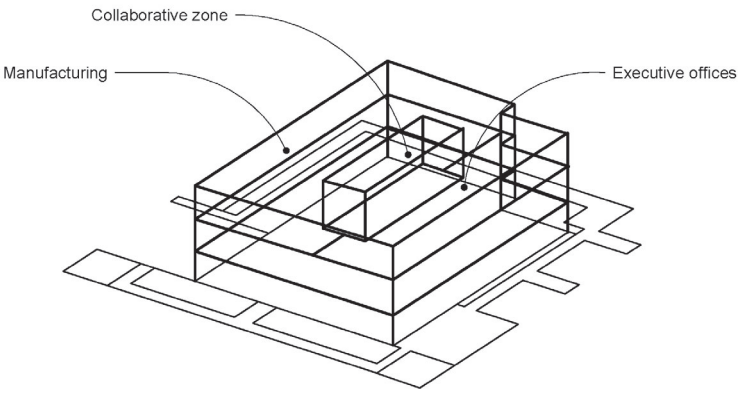


The third floor is designed for a second manufacturing company. The business that occupies this space is a 3D printing company. The contemporary layout is cohesive with the second level below with manufacutring space, retail display and executive offices. Concrete tiles are throughout the workspace with natural travertine stone in the restrooms and black marble tile is a showcase in the retail space.

Collaborative Cube





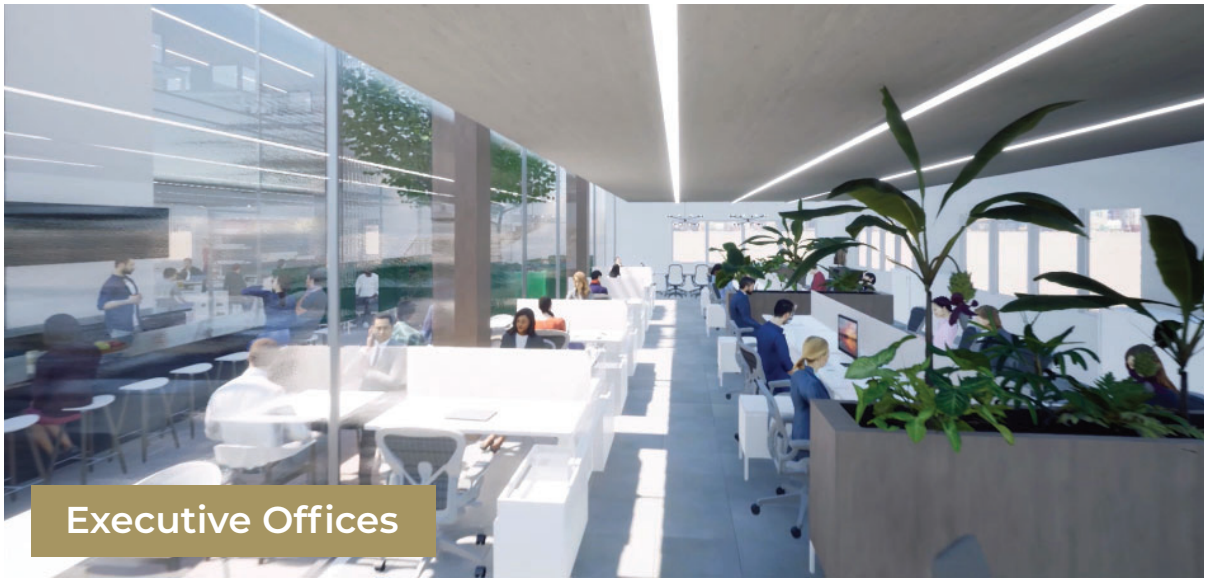

Executive Offices



Retail Space





Manufacturing


3D Printing

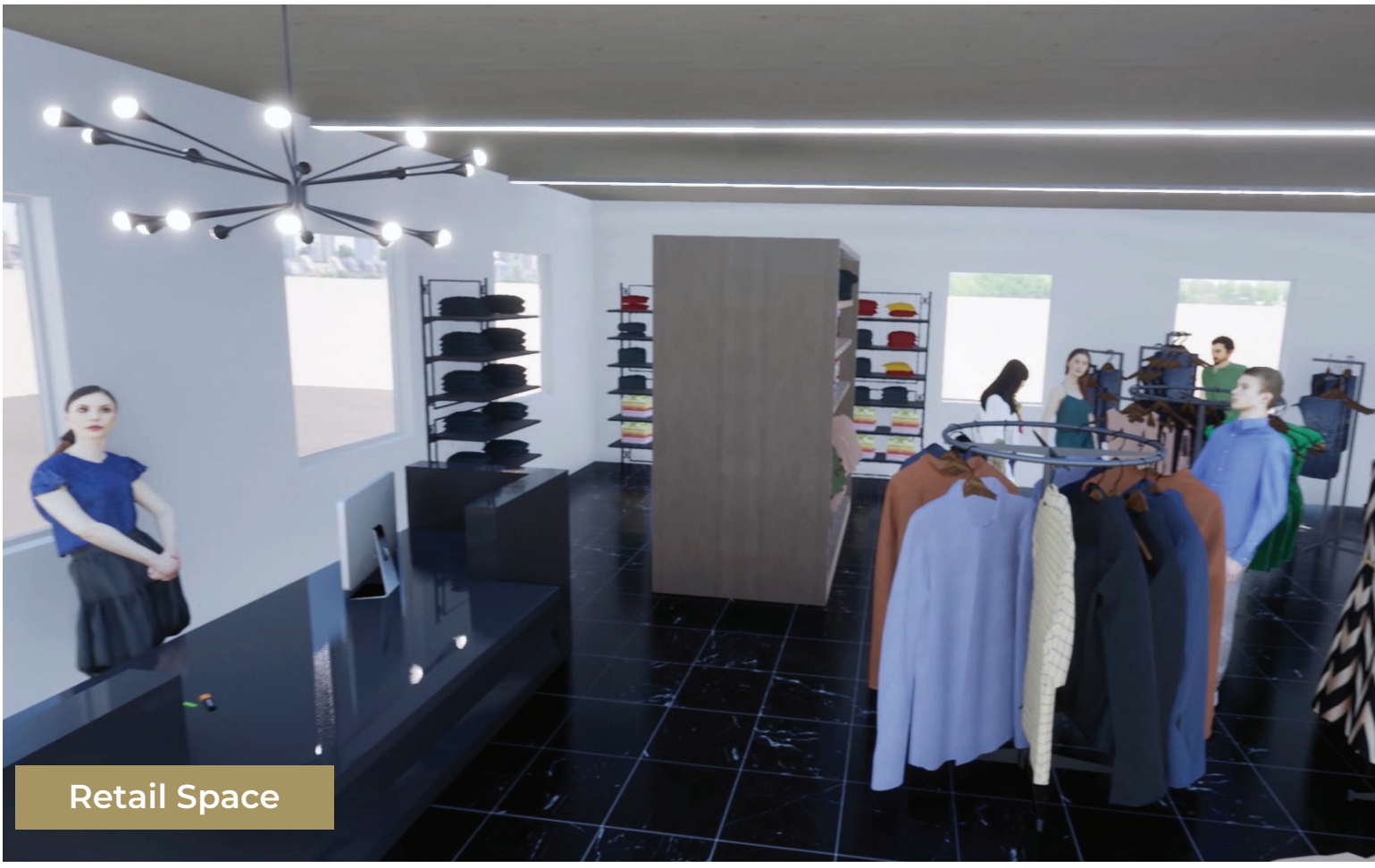
Retail Space



Collaborative Cube





Executive Offices